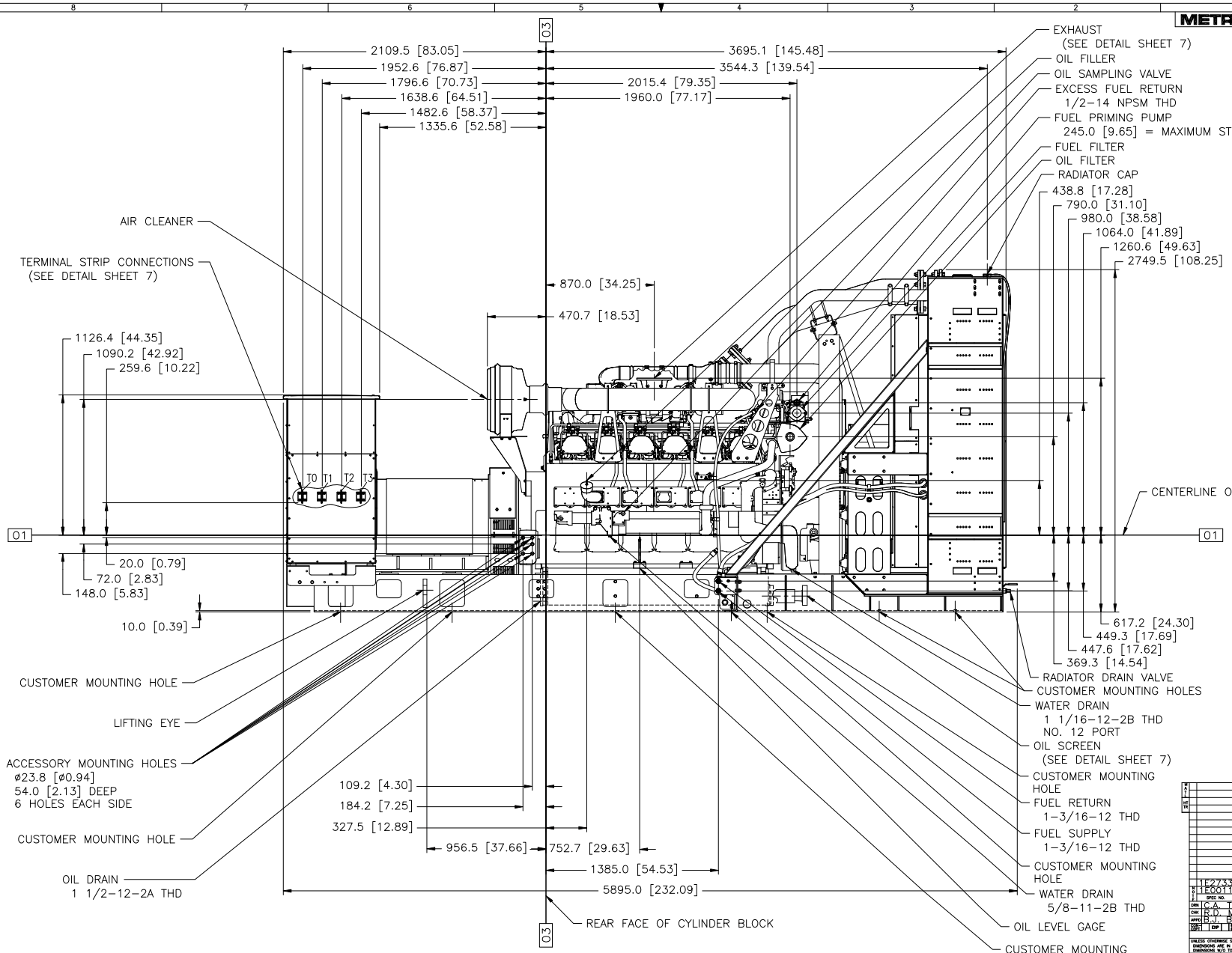

CAT 3512C PACKAGE GENERATOR SET
DWG # 284-6048 CHG 02
METRIC [INCH]
RIGHT SIDE VIEW
GP-0920 CHG 05 SHOWN

MODEL	PRICING AR
3512C	GP-0920 CHG 05

1E2733 DRAWING-AUTOCAD
1E0011 INTPR & TOL

	SPEC NO.	NAME
DRN		C.A. THURMAN
CHK		R.D. MYERS
APPD		B.J. BROCK
CONC		
COMPT	DSP / PRO	PROD X

UNLESS OTHERWISE SPECIFIED
DIMENSIONS ARE IN MM [INCH]
DIMENSIONS W/O TOL ARE BASIC

SCALE 1 = 10
A 10mm 25 IN
SHEET 1 OF 7
THIRD ANGLE PROJECTION
CHG 02 DATE 01FEB07

CATERPILLAR INC.

THE INFORMATION HEREIN IS THE PROPERTY OF CATERPILLAR INC. AND IS ITS CONFIDENTIAL INFORMATION. IT MAY NOT BE DISCLOSED TO THIRD PARTIES, STORED, USED OR RELEASED FOR ANY WORK OR PURPOSE OTHER THAN WHAT IS PROVIDED BY CATERPILLAR INC. OR ITS AFFILIATES.

INSTALLATION-ENGINE
PACKAGE GENERATOR SET

284-6048 — SIZE A1 SUB — CONTROL W868 — E

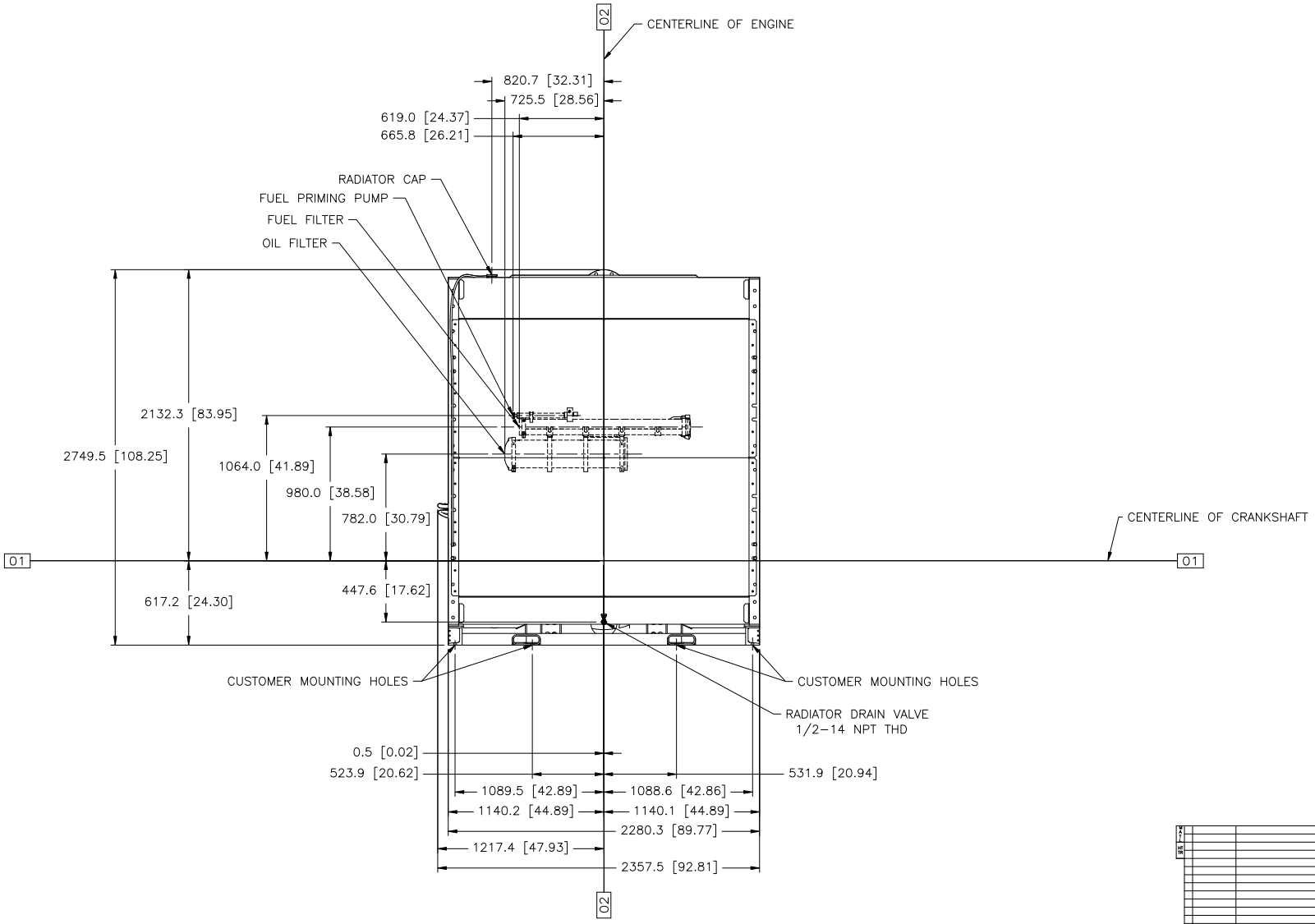

CAT 3512C PACKAGE GENERATOR SET
DWG # 284-6048 CHG 02
METRIC [INCH]
FRONT VIEW
GP-0920 CHG 05 SHOWN

1E2733	DRAWING-AUTOCAD	
1E0011	INTPR & TOL	
SPEC NO.	NAME	
DRN	C.A. THURMAN	
CHK	R.D. MYERS	
APPD	B.J. BROCK	
CONC DEPT	DSP / MK PROJ / PROD X	

UNLESS OTHERWISE SPECIFIED
DIMENSIONS ARE IN MM [INCH]
DIMENSIONS W/O TOL ARE BASIC

SCALE 1 = 10
A 13mm 25 IN
THIRD ANGLE PROJECTION
SHEET 2 OF 7
CHG 02
DATE 01FEB07

CATERPILLAR INC.

THE INFORMATION HEREIN IS THE PROPERTY OF CATERPILLAR INC. AND/OR ITS SUBSIDIARIES AND MAY NOT BE DISCLOSED TO THIRD PARTIES OR REPRODUCED, USED, OR OTHERWISE DISPOSED OF IN ANY MANNER WITHOUT PRIOR WRITTEN CONSENT.

INSTALLATION-ENGINE
PACKAGE GENERATOR SET

284-6048 - | USER | CONTROL | W868 | E

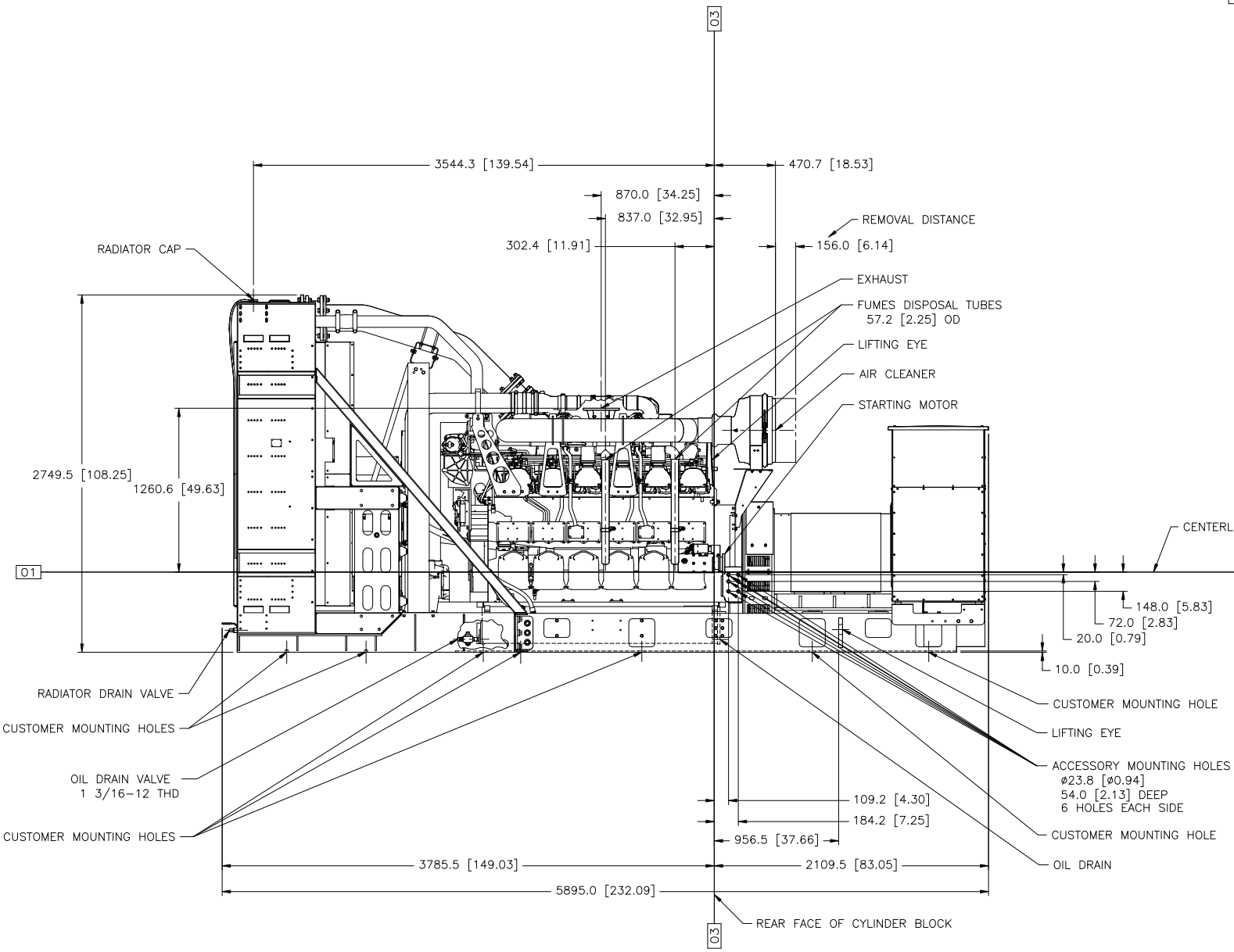

CAT 3512C PACKAGE GENERATOR SET
DWG # 284–6048 CHG 02
METRIC [INCH]
LEFT SIDE VIEW
GP–0920 CHG 05 SHOWN

1E2733	DRAWING–AUTOCAD	
1E0011	INTPR & TOL	
SPEC NO.	NAME	
DRN	C.A. THURMAN	
CHK	R.D. MYERS	
APPD	B.J. BROCK	
CONC DEPT	DSP / MK PROJ / PROD X	

UNLESS OTHERWISE SPECIFIED
DIMENSIONS ARE IN MM [INCH]
DIMENSIONS W/O TOL ARE BASIC

SCALE 1 = 10 | THIRD ANGLE PROJECTION | 02 01FEB07 | SHEET 3 OF 7 | CHG | DATE

CATERPILLAR INC.

THE INFORMATION HEREIN IS THE PROPERTY OF CATERPILLAR INC. AND IS TO BE MAINTAINED IN CONFIDENCE. IT MAY BE USED ONLY AS AUTHORIZED BY CATERPILLAR, AND ANY USE WITHOUT THE FOR WHICH IT IS LOANED IS PROHIBITED.

INSTALLATION–ENGINE
PACKAGE GENERATOR SET

284–6048 – | USER SIZE A | CONTROL W868 | E

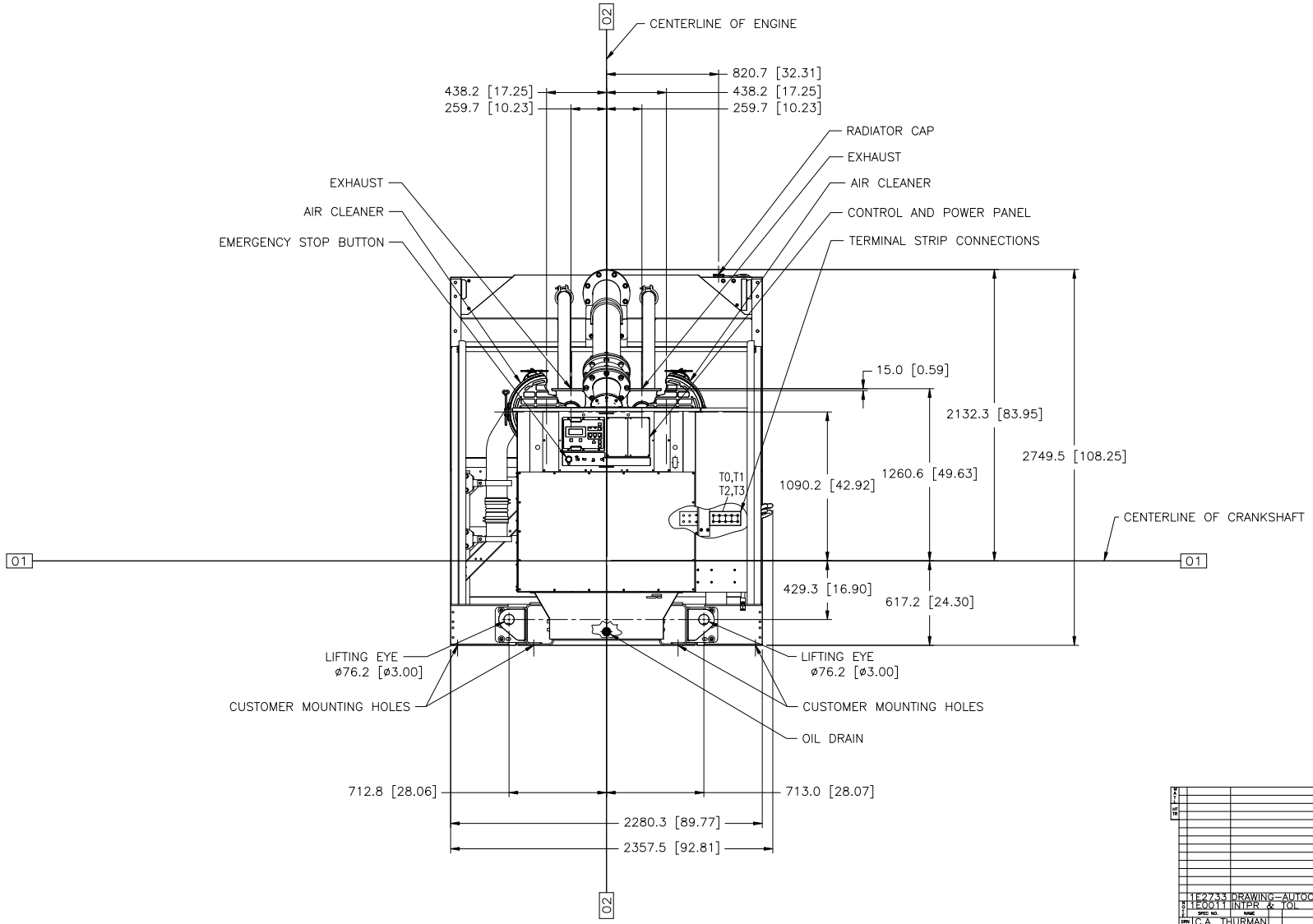

CAT 3512C PACKAGE GENERATOR SET
DWG # 284–6048 CHG 02
METRIC [INCH]
REAR VIEW
GP–0920 CHG 05 SHOWN

1E2733	DRAWING–AUTOCAD	
1E0011	INTPR & TOL	
SPEC NO.	NAME	
DRN	C.A. THURMAN	
CHK	R.D. MYERS	
APPD	B.J. BROCK	
CONC ENGR	DSP / MKT PROD / PROD X	

UNLESS OTHERWISE SPECIFIED
DIMENSIONS ARE IN MM [INCH]
DIMENSIONS W/O TOL ARE BASIC

SCALE 1 = 10 | THIRD ANGLE PROJECTION | CHG 02 | DATE 01FEB07
SHEET 4 OF 7

CATERPILLAR INC.

THIS INFORMATION HEREIN IS THE PROPERTY OF CATERPILLAR INC. AND IS TO BE MAINTAINED IN THE STRICTEST CONFIDENCE. IT SHALL NOT BE REPRODUCED, COPIED, USED OR DISCLOSED FOR ANY PURPOSE OR IN WHOLE OR PARTIAL WITHOUT THE WRITTEN PERMISSION OF CATERPILLAR INC.

INSTALLATION–ENGINE
PACKAGE GENERATOR SET

284–6048 – | LNR | SIZE A | CONTROL W868 | E

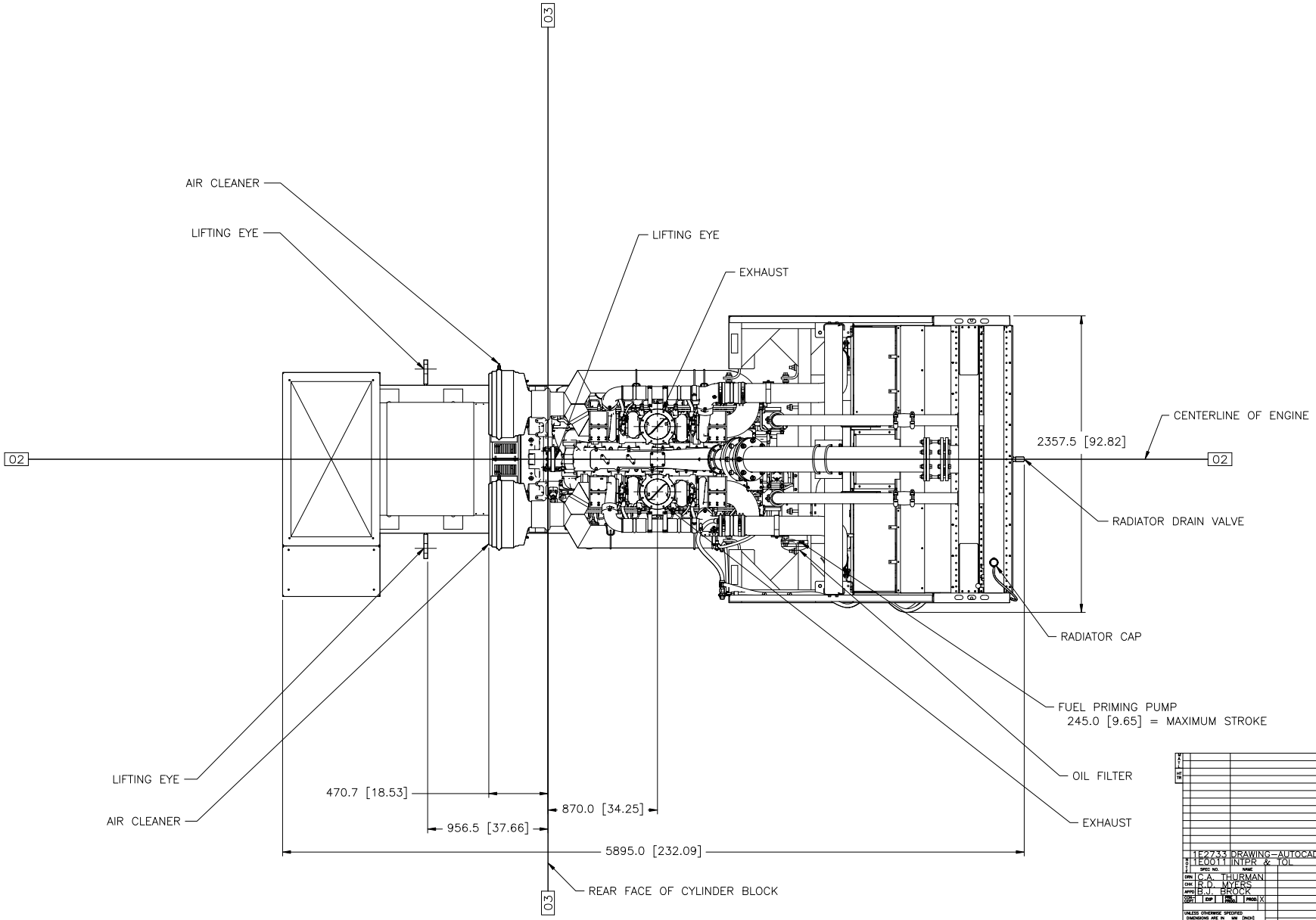

CAT 3512C PACKAGE GENERATOR SET
DWG # 284-6048 CHG 02
METRIC [INCH]
TOP VIEW
GP-0920 CHG 05 SHOWN

1E2733	DRAWING-AUTOCAD	
1E0011	INTPR & TOL	
SPEC NO.	NAME	
DRN	C.A. THURMAN	
CHK	R.D. MYERS	
APPD	B.J. BROCK	
DOC CONT	EXP / ENG PROJ / PROD	X

UNLESS OTHERWISE SPECIFIED
DIMENSIONS ARE IN MM [INCH]
DIMENSIONS W/O TOL ARE BASIC

SCALE 1 = 10 | 3 Views 25 IN | SHEET 5 OF 7 | THIRD ANGLE PROJECTION | CHG 02 | DATE 01FEB07

CATERPILLAR INC.

THIS REFERENCE VERSION IS THE PROPERTY OF CATERPILLAR INC. AND/OR ITS SUBSIDIARIES. ALL RIGHTS ARE RESERVED. THIS DOCUMENT MAY NOT BE COPIED, USED, OR DISCLOSED FOR ANY PURPOSE IF OR UNLESS IS PROHIBITED, EXCEPT AS MAY BE OTHERWISE PERMITTED BY CONTRACT.

INSTALLATION-ENGINE
PACKAGE GENERATOR SET

284-6048 — SHEET 1 OF 1 SIZE | CONTROL W868 | E

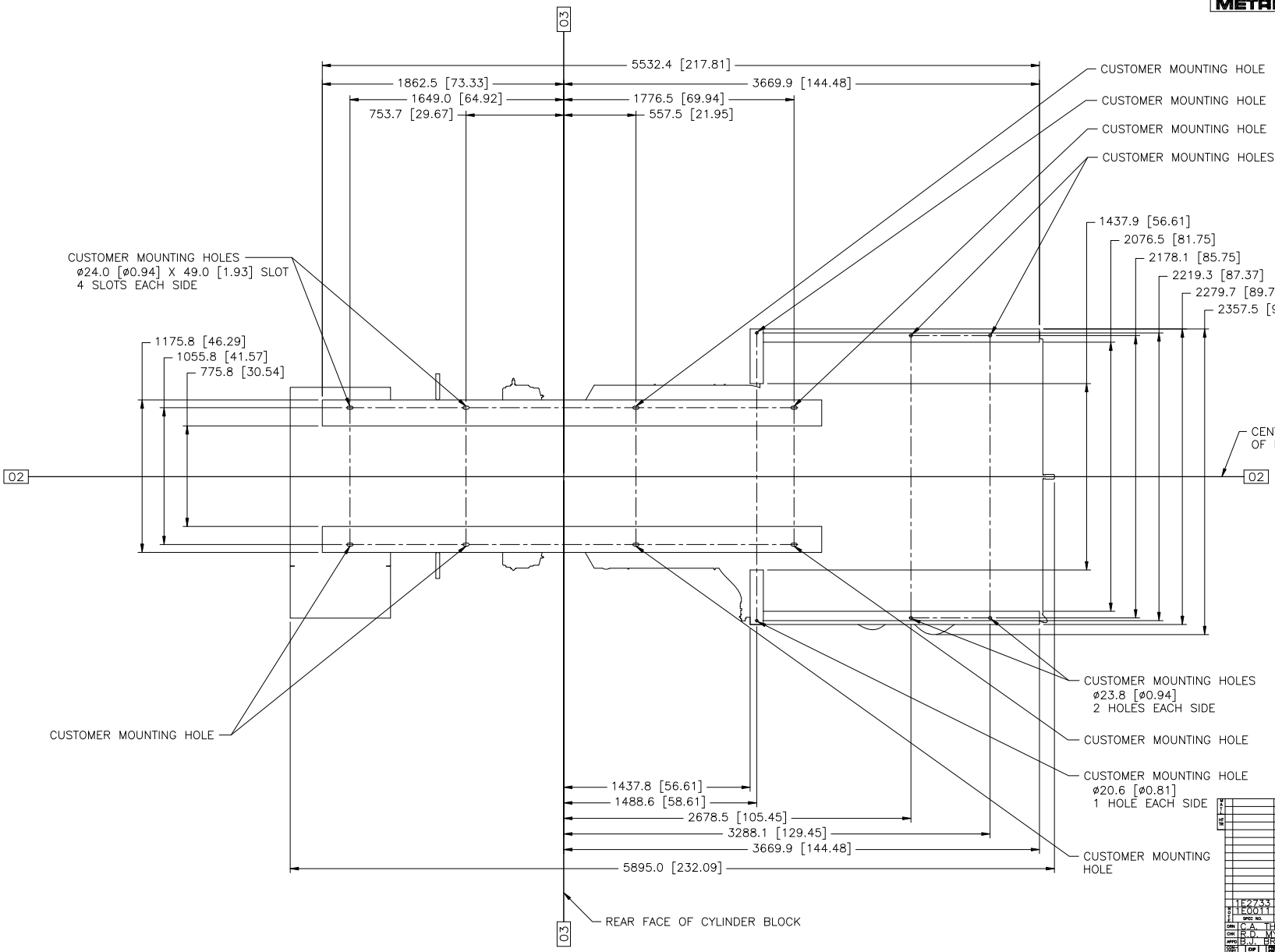
METRIC 284-6048
03
5532.4 [217.81]
1862.5 [73.33]
3669.9 [144.48]
1649.0 [64.92]
1776.5 [69.94]
753.7 [29.67]
557.5 [21.95]
CUSTOMER MOUNTING HOLE
CUSTOMER MOUNTING HOLE
CUSTOMER MOUNTING HOLE
CUSTOMER MOUNTING HOLES
1437.9 [56.61]
2076.5 [81.75]
2178.1 [85.75]
2219.3 [87.37]
2279.7 [89.75]
2357.5 [92.81]
CUSTOMER MOUNTING HOLES
ø24.0 [ø0.94] X 49.0 [1.93] SLOT
4 SLOTS EACH SIDE
1175.8 [46.29]
1055.8 [41.57]
775.8 [30.54]
CENTERLINE
OF ENGINE
02
02
CUSTOMER MOUNTING HOLES
ø23.8 [ø0.94]
2 HOLES EACH SIDE
CUSTOMER MOUNTING HOLE
CUSTOMER MOUNTING HOLE
CUSTOMER MOUNTING HOLE
ø20.6 [ø0.81]
1 HOLE EACH SIDE
1437.8 [56.61]
1488.6 [58.61]
2678.5 [105.45]
3288.1 [129.45]
3669.9 [144.48]
5895.0 [232.09]
CUSTOMER MOUNTING
HOLE
REAR FACE OF CYLINDER BLOCK
03
CAT 3512C PACKAGE GENERATOR SET
DWG # 284-6048 CHG 02
METRIC [INCH]
FOOTPRINT
GP-0920 CHG 05 SHOWN
1E2733 DRAWING-AUTOCAD
1E0011 INTPR & TOL
SPEC NO. NAME
DRN C.A. THURMAN
CHK R.D. MYERS
APPD B.J. BROCK
DISC/CONT DSP ME PROD PROD X
UNLESS OTHERWISE SPECIFIED
DIMENSIONS ARE IN MM [INCH]
DIMENSIONS W/O TOL ARE BASIC
SCALE 1 = 10
SHEET 6 OF 7
THIRD ANGLE PROJECTION
02 01FEB07
CHG DATE
CATERPILLAR INC.
THE INFORMATION HEREIN IS THE PROPERTY OF CATERPILLAR INC. AND IS TO BE MAINTAINED IN CONFIDENCE. IT IS TO BE USED ONLY FOR THE PURPOSE STATED, AND NO USE OR DISCLOSURE MAY EVER BE MADE IF A LICENSE IS PROVIDED.
INSTALLATION-ENGINE
PACKAGE GENERATOR SET
284-6048 - 1 REL A SUB
CONTROL W868
E